Smoke and gas Detection monitor

INTRODUCTION

Here to make Smoke and Gas Level Monitor Using MQ-2 Gas Sensor Module, thingspeak server. The measured the quantity of gas% in the air data can be monitored and stored in thingspeak server and data send and accessible over the internet.

In this tutorial, we are going to discuss how to interface the MQ2 smoke detector sensor with Node MCU. The MQ2 sensor is a powerful sensor in order to measure different types of gases like Butane, Methane, LPG, Smoke, Alcohol, Propane, Hydrogen concentrations in the air.

REQUIREMENTS

1) MQ2 GAS SENSOR
2) NODE MCU
3) BREAD BOARD

MQ2 GAS SENSOR

Gas sensor is a device which detects the concentration level of the gases present in the atmosphere. This project contains interfacing of MQ2 sensor with Arduino and its code.

When it comes to measuring or detecting a particular Gas the MQ series Gas sensors are the most commonly used ones. These sensors can either be purchased as a module or as just the sensor alone. If you are trying to only detect (not measuring ppm) the presence of a gas then you can buy it as a module since it comes with an op-amp comparator and a digital out pin. But if you planning to measure the ppm of a gas it is recommended to buy the sensor alone (without module).

MQ2 Gas sensor is a Metal Oxide Semiconductor (MOS) type Gas Sensor mainly used to detect gases like Methane, Butane, LPG, Smoke, etc. It is also known as Chemi resistors as the gas detection is based on the change of resistance of the sensing material when the Gas comes in to contact.

Sensor(MQ2) module is useful for gas leakage detection (home and industry). It is suitable for detecting H2, LPG, CH4, CO, Alcohol, Smoke or Propane. Due to its high sensitivity and fast response time, measurement can be taken as soon as possible.

USE OF MQ2

MQ gas sensors are a family of sensors which are used to detect a wide variety of gases like alcohol, smoke, methane, LPG, hydrogen, NH3, Benzene, Propane etc. These sensors are made up of electrode which is coated with a sensing material, and it is heated to make it more reactive and sensitive.

Node MCU

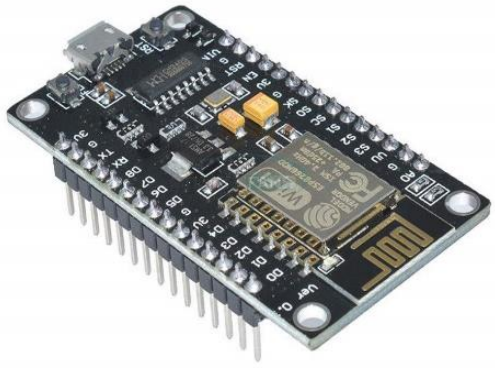

Node MCU ESP8266-12E MCU is a development board with one analogue and

many general-purpose input output (GPIO) pins. It has 4MB flash memory, and can operate at a default clock frequency of 80MHz. In this project, Analog pin A0 of Node MCU is used to read Data of MQ2 Sensor

NodeMCU is a low-cost open source IoT platform. It initially included firmware which runs on the ESP8266 Wi-Fi SoC from Espressif Systems, and hardware which was based on the ESP-12 module. Later, support for the ESP32 32-bit MCU was added.

NodeMCU is an open source firmware for which open source prototyping board designs are available. The name "NodeMCU" combines "node" and "MCU" (micro-controller unit). Strictly speaking, the term "NodeMCU" refers to the firmware rather than the associated development kits.[citation needed]

Both the firmware and prototyping board designs are open source.

The firmware uses the Lua scripting language. The firmware is based on the eLua project, and built on the Espressif Non-OS SDK for ESP8266. It uses many open source projects, such as lua-cjson and SPIFFS. Due to resource constraints, users need to select the modules relevant for their project and build a firmware tailored to their needs. Support for the 32-bit ESP32 has also been implemented.

The prototyping hardware typically used is a circuit board functioning as a dual in-line package (DIP) which integrates a USB controller with a smaller surface-mounted board containing the MCU and antenna. The choice of the DIP format allows for easy prototyping on breadboards. The design was initially based on the ESP-12 module of the ESP8266, which is a Wi-Fi SoC integrated with a Tensilica Xtensa LX106 core, widely used in IoT applications (see related projects).

TYPES

There are two available versions of NodeMCU as version 0.9 & 1.0 where the version 0.9 contains ESP-12 and version 1.0 contains ESP-12E where E stands for "Enhanced".

USED FOR

NodeMCU is an open source platform based on ESP8266 which can connect objects and let data transfer using the Wi-Fi protocol. In addition, by providing some of the most important features of microcontrollers such as GPIO, PWM, ADC, and etc, it can solve many of the project's needs alone.

BREAD BOARD

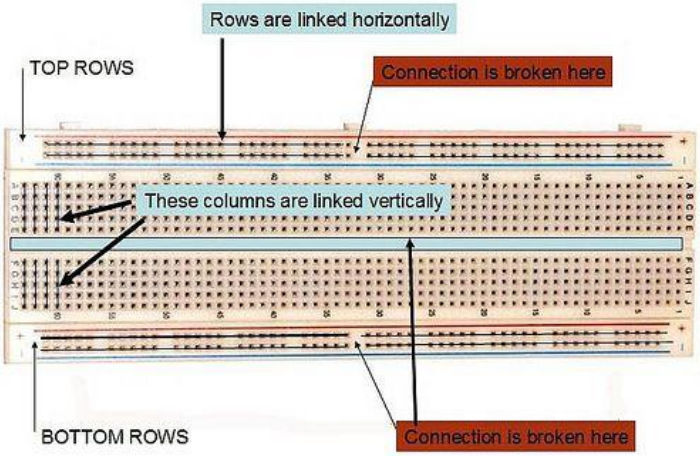

Breadboards have many tiny sockets (called 'holes') arranged on a 0.1" grid. The leads of most components can be pushed straight into the holes. ICs are inserted across the central gap with their notch or dot to the left.

Wire links can be made with single-core plastic-coated wire of 0.6mm diameter (the standard size), this is known as 1/0.6mm wire. I suggest buying a pack with several colours to help identify connections, red for +Vs wires, black for 0V, and so on

A breadboard, solderless breadboard, or protoboard is a construction base used to build semi-permanent prototypes of electronic circuits. Unlike a perfboard or

stripboard, breadboards do not require soldering or destruction of tracks and are hence reusable

USED FOR

A breadboard (sometimes called a plugblock) is used for building temporary circuits. It is useful to designers because it allows components to be removed and replaced easily. It is useful to the person who wants to build a circuit to demonstrate its action, then to reuse the components in another circuit.

Work

A breadboard is a rectangular plastic board with a bunch of tiny holes in it. These holes let you easily insert electronic components to prototype (meaning to build and test an early version of) an electronic circuit, like this one with a battery, switch, resistor, and an LED (light-emitting diode).

PROCEDURE

The MQ-2 smoke sensor will give the output in the form of analog voltage . We have set a condition in our code that if the output value of the sensor is greater than 400, then the buzzer will start to beep and the red LED will light up; and if the output value of the sensor is less than 400, then the buzzer will remain quiet and the green LED will light up.

The ESP used here will create a web page at an IP address and will send the data to this IP address and will print the data there. After uploading the code, this IP address can be seen in the serial monitor

When you type this IP address in your browser, then the output of the project will be shown there

CIRCUIT DIAGRAM

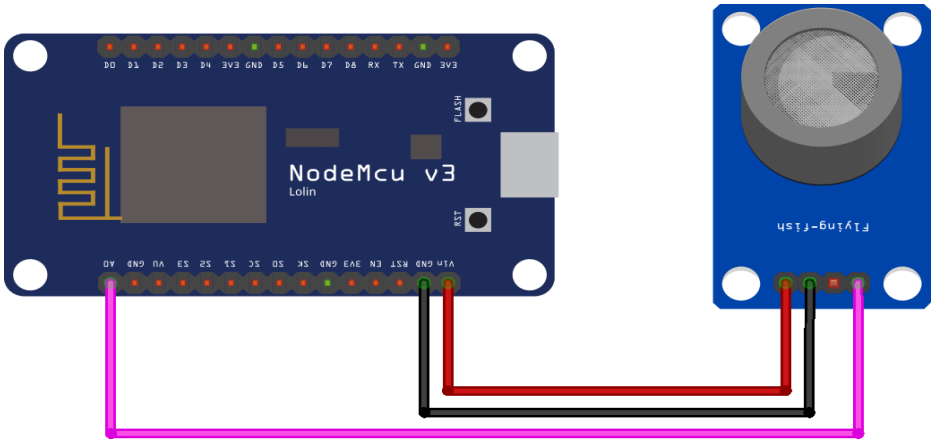

CODE

```
#include <ESP8266WiFi.h>;

#include <WiFiClient.h>;

#include <ThingSpeak.h>;

const char* ssid = "ABCDE"; //Your Network SSID

const char* password = "**"; //Your Network Password

int val;

int ALCOHOL_SENSOR = A0;
```

```
WiFiClient client;

unsigned long myChannelNumber = ***; //Your Channel Number (Without
Brackets)

const char * myWriteAPIKey = "*******"; //Your Write API Key

void setup()

{

Serial.begin(9600);

delay(10);

// Connect to WiFi network

WiFi.begin(ssid, password);



ThingSpeak.begin(client);

}
```

```
void loop()

{

val = analogRead(ALCOHOL_SENSOR); //Read Analog values and Store in val
variable

Serial.print(val); //Print on Serial Monitor

delay(1000);

ThingSpeak.writeField(myChannelNumber, 1,val, myWriteAPIKey); //Update in
ThingSpeak




delay(100);

}
```

OUTPUT